SynFlex Elektro GmbH
Auf den Kreuzen 24
D-32825 Blomberg Germany
Telefon +49-5235-968-0
E-Mail info@synflex.de

SynCon® TRK 4, TRK 4-FS and TRK 10

Attributes

TRK terminals can be selectively snap mounted on the 2 x 10mm or 2 x 35 mm mounting rail and bobbins with integrated mounting compartments. In addition to the ground terminal block,all insulation housings have a covering flap. This reveals thelateral open solder hook to facilitate the insertion and soldering of winding ends and subsequent fingerproof covering in compliance with VBG 4.This type covers the cross-sectional range up to 10mm². With the exception of the TRK 10, the terminals are availablewith screw or screw and slip-on connections.
The TRK 4-SL yellow/green ground terminal block can beharmoniously connected to the remaining terminal types. It is screwed to the laminated core together with the mounting rail.
All TRK terminals are designated with the marker pin BN-TRK.

Delivery forms

50 units per package

The information on this data sheet is based on the information provided by our supplier. It does not represent any specification or agreements regarding conditions or properties. The indicated values are standard values. Deviations from those values due to production and application cannot be excluded. The information on this data sheet is addressed to experts who use it at their own discretion and at their own risk. We do not guarantee results, or accept liability for the indicated specifications or for results obtained based on the specifications. Please contact us for more detailed information. Non-toxic and toxic substances are listed on the safety data sheet.
Updated 10/18

SynFlex Elektro GmbH
Auf den Kreuzen 24
D-32825 Blomberg Germany
Telefon +49-5235-968-0
E-Mail info@synflex.de

Technical drawing

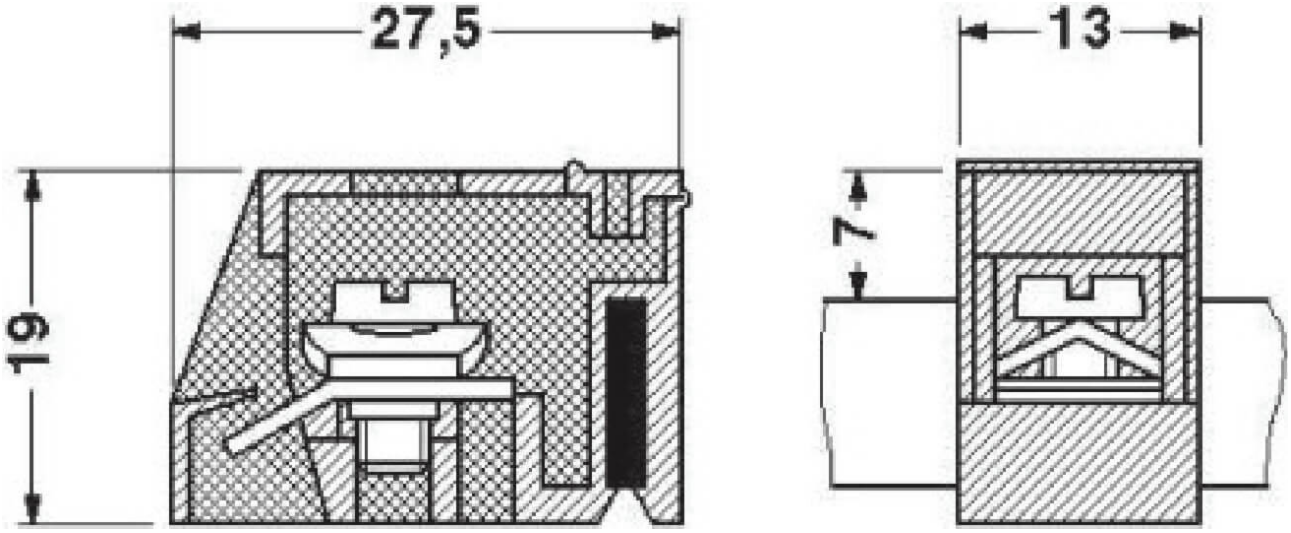

TRK 4

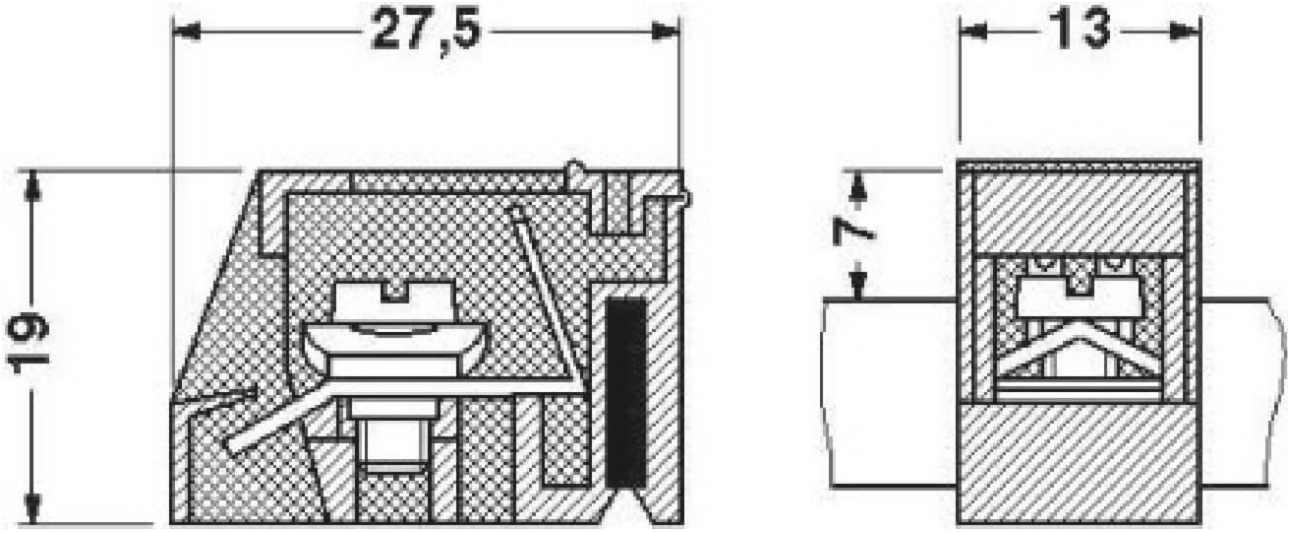

TRK 4-FS

The information on this data sheet is based on the information provided by our supplier. It does not represent any specification or agreements regarding conditions or properties. The indicated values are standard values. Deviations from those values due to production and application cannot be excluded. The information on this data sheet is addressed to experts who use it at their own discretion and at their own risk. We do not guarantee results, or accept liability for the indicated specifications or for results obtained based on the specifications. Please contact us for more detailed information. Non-toxic and toxic substances are listed on the safety data sheet.
Updated 10/18

SynFlex Elektro GmbH
Auf den Kreuzen 24
D-32825 Blomberg Germany
Telefon +49-5235-968-0
E-Mail info@synflex.de

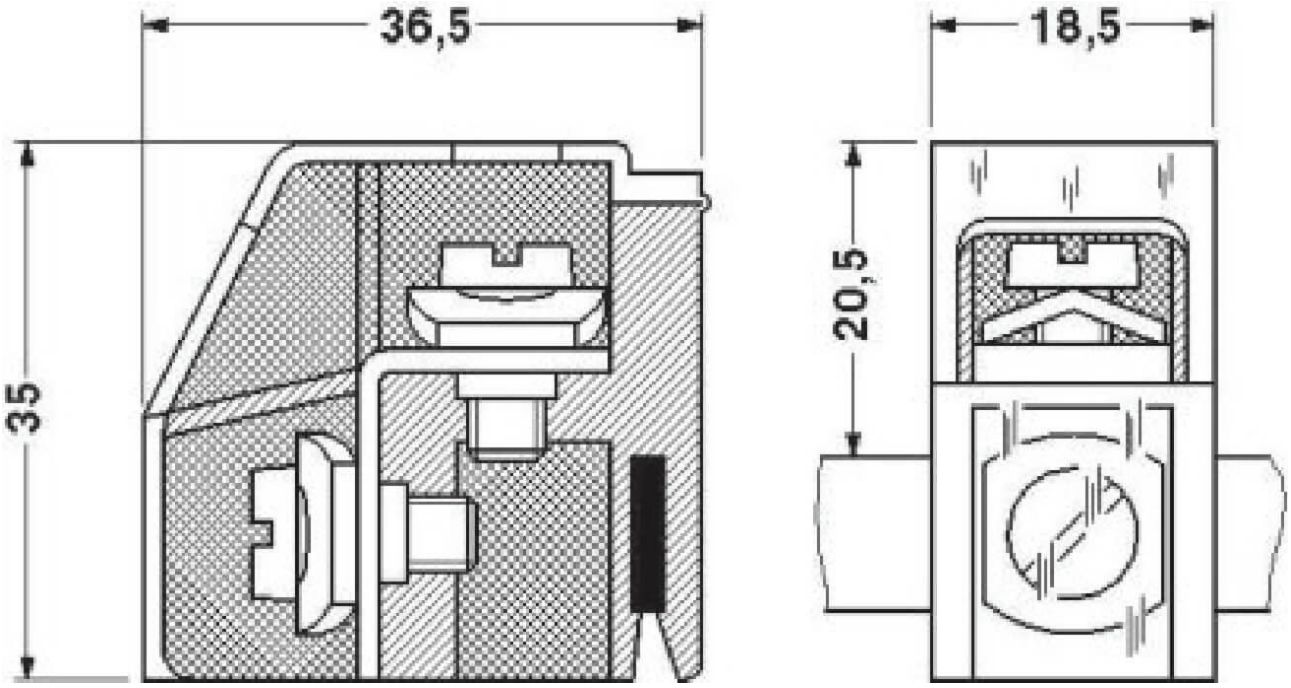

TRK 10

The information on this data sheet is based on the information provided by our supplier. It does not represent any specification or agreements regarding conditions or properties. The indicated values are standard values. Deviations from those values due to production and application cannot be excluded. The information on this data sheet is addressed to experts who use it at their own discretion and at their own risk. We do not guarantee results, or accept liability for the indicated specifications or for results obtained based on the specifications. Please contact us for more detailed information. Non-toxic and toxic substances are listed on the safety data sheet.
Updated 10/18

SynFlex Elektro GmbH
Auf den Kreuzen 24
D-32825 Blomberg Germany
Telefon +49-5235-968-0
E-Mail info@synflex.de

Technical data	Unit of measure	TRK 4	TRK 4-FS
Design		mounting rail	mounting rail
Rated cross section	mm²	4	4
Max. Strombelastbarkeit	A	32	16
Rated voltage	V	only possible with transformer	only possible with transformer
Rated insulation voltage	V	800	800*
Rated surge voltage / Contamination class	kV / -	8 / 3	8 / 3
Surge voltage category/Insulation material group		III / I	III / I

Nominal data acc. to CSA	Unit of measure	TRK 4	TRK4-FS
Rated voltage	V	600	600
Nominal current	A	16	16
AWG	kcmil	18-12	18-12

Nominal data acc. to UL	Unit of measure	TRK 4	TRK 4-FS
Rated voltage	V	600	600
Nominal current	A	30	30

The information on this data sheet is based on the information provided by our supplier. It does not represent any specification or agreements regarding conditions or properties. The indicated values are standard values. Deviations from those values due to production and application cannot be excluded. The information on this data sheet is addressed to experts who use it at their own discretion and at their own risk. We do not guarantee results, or accept liability for the indicated specifications or for results obtained based on the specifications. Please contact us for more detailed information. Non-toxic and toxic substances are listed on the safety data sheet.
Updated 10/18

SynFlex Elektro GmbH
Auf den Kreuzen 24
D-32825 Blomberg Germany
Telefon +49-5235-968-0
E-Mail info@synflex.de

Nominal data acc. to UL	Unit of measure	TRK 4	TRK 4-FS
AWG	kcmil	16-10	16-10

Connection data	Unit of measure	TRK 4	TR4 -FS
Strand cross section rigid min	mm²	0.75	0.75
Strand cross section rigid max	mm²	4	4
Strand cross section flexible min	mm²	1	1
Strand cross section flexible max	mm²	4	4
Strand cross section with AEH min	mm²	0.75	0.75
Strand cross section with AEH max	mm²	2.5	2.5
2 strands equal cross section rigid min	mm²	0.75	0.75
2 strands equal cross section rigid max	mm²	4	4
2 strands equal cross section flexible min	mm²	1	1
2 strands equal cross section flexible max	mm²	4	4
2 strands equal cross section with TWIN-AEH min	mm²	0.5	0.5
2 strands equal cross section with TWIN-AEH max	mm²	1.5	1.5
Number of connections		2	2+2FS

The information on this data sheet is based on the information provided by our supplier. It does not represent any specification or agreements regarding conditions or properties. The indicated values are standard values. Deviations from those values due to production and application cannot be excluded. The information on this data sheet is addressed to experts who use it at their own discretion and at their own risk. We do not guarantee results, or accept liability for the indicated specifications or for results obtained based on the specifications. Please contact us for more detailed information. Non-toxic and toxic substances are listed on the safety data sheet.
Updated 10/18

SynFlex Elektro GmbH
Auf den Kreuzen 24
D-32825 Blomberg Germany
Telefon +49-5235-968-0
E-Mail info@synflex.de

Connection data	Unit of measure	TRK 4	TR4 -FS
Connection type		screw connection	screw connection
Stripping length	mm	11	11
Thread		M4	M4
Torque	Nm	1.5-1.8	1.5-1.8

Material data	TRK 4	TRK 4-FS
Insulation material	PA	PA
Inflammability class acc. to UL 94	V2	V2
Contact surface	tin-plated	tin-plated

Description	TRK 4
Colour	TRK 4 GY
Colour	TRK 4 OG

Description	TRK 4-FS	TRK 10
Colour	TRK 4 FS	TRK 10 GY

The information on this data sheet is based on the information provided by our supplier. It does not represent any specification or agreements regarding conditions or properties. The indicated values are standard values. Deviations from those values due to production and application cannot be excluded. The information on this data sheet is addressed to experts who use it at their own discretion and at their own risk. We do not guarantee results, or accept liability for the indicated specifications or for results obtained based on the specifications. Please contact us for more detailed information. Non-toxic and toxic substances are listed on the safety data sheet.
Updated 10/18

SynFlex Elektro GmbH
Auf den Kreuzen 24
D-32825 Blomberg Germany
Telefon +49-5235-968-0
E-Mail info@synflex.de

Description	TRK 4-FS	TRK 10
Colour	TRK 4-FS OG	TRK 10 OG

Technical data	Unit of measure	TRK 10
Design		mounting trail
Rated cross section	mm²	10
Max. Strombelastbarkeit	A	57
Rated voltage	V	only possible with transformer
Rated insulation voltage	V	800
Rated surge voltage / Contamination class	kV / -	8/3
Surge voltage category/Insulation material group		III / I

Nominal data acc. to CSA	Unit of measure	TRK 10
Rated voltage	V	600
Nominal current	A	32
AWG	kcmil	14-8

The information on this data sheet is based on the information provided by our supplier. It does not represent any specification or agreements regarding conditions or properties. The indicated values are standard values. Deviations from those values due to production and application cannot be excluded. The information on this data sheet is addressed to experts who use it at their own discretion and at their own risk. We do not guarantee results, or accept liability for the indicated specifications or for results obtained based on the specifications. Please contact us for more detailed information. Non-toxic and toxic substances are listed on the safety data sheet.
Updated 10/18

SynFlex Elektro GmbH
Auf den Kreuzen 24
D-32825 Blomberg Germany
Telefon +49-5235-968-0
E-Mail info@synflex.de

Nominal data acc. to UL	Unit of measure	TRK 10
Rated voltage	V	600
Nominal current	A	57
AWG	kcmil	10-6

Connection data	Unit of measure	TRK 10
Strand cross section rigid min	mm²	2.5
Strand cross section rigid max	mm²	10
Strand cross section flexible min	mm²	4
Strand cross section flexible max	mm²	10
Strand cross section with AEH min	mm²	2.5
Strand cross section with AEH max	mm²	6
2 strands equal cross section rigid min	mm²	2.5
2 strands equal cross section rigid max	mm²	10
2 strands equal cross section flexible min	mm²	4
2 strands equal cross section flexible max	mm²	10
2 strands equal cross section with TWIN-AEH min	mm²	1.5
2 strands equal cross section with TWIN-AEH max	mm²	4
Number of connections		2
Connection type		screw connection

The information on this data sheet is based on the information provided by our supplier. It does not represent any specification or agreements regarding conditions or properties. The indicated values are standard values. Deviations from those values due to production and application cannot be excluded. The information on this data sheet is addressed to experts who use it at their own discretion and at their own risk. We do not guarantee results, or accept liability for the indicated specifications or for results obtained based on the specifications. Please contact us for more detailed information. Non-toxic and toxic substances are listed on the safety data sheet.
Updated 10/18

SynFlex Elektro GmbH
Auf den Kreuzen 24
D-32825 Blomberg Germany
Telefon +49-5235-968-0
E-Mail info@synflex.de

Connection data	Unit of measure	TRK 10
Stripping length	mm	16
Thread		M5
Torque	Nm	4-4.5

Material data	TRK 10
Insulation material	PA
Inflammability class acc. to UL 94	V0
Contact surface	tin-plated

The information on this data sheet is based on the information provided by our supplier. It does not represent any specification or agreements regarding conditions or properties. The indicated values are standard values. Deviations from those values due to production and application cannot be excluded. The information on this data sheet is addressed to experts who use it at their own discretion and at their own risk. We do not guarantee results, or accept liability for the indicated specifications or for results obtained based on the specifications. Please contact us for more detailed information. Non-toxic and toxic substances are listed on the safety data sheet.
Updated 10/18